UNIVERSITY OF CAMBRIDGE INTERNATIONAL EXAMINATIONS
General Certificate of Education
Advanced Subsidiary Level and Advanced Level

CANDIDATE NAME									
CENTRE NUMBER						CANDIDATE NUMBER				

5234692305

PHYSICS **9702/32**

Advanced Practical Skills 2 **May/June 2011**

2 hours

Candidates answer on the Question Paper.

Additional Materials: As listed in the Confidential Instructions.

READ THESE INSTRUCTIONS FIRST

Write your Centre number, candidate number and name on all the work you hand in.
Write in dark blue or black pen.
You may use a soft pencil for any diagrams, graphs or rough working.
Do not use staples, paper clips, highlighters, glue or correction fluid.
DO **NOT** WRITE IN ANY BARCODES.

Answer **both** questions.
You will be allowed to work with the apparatus for a maximum of one hour for each question.
You are expected to record all your observations as soon as these observations are made, and to plan the presentation of the records so that it is not necessary to make a fair copy of them.
You may lose marks if you do not show your working or if you do not use appropriate units.

Additional answer paper and graph paper should be submitted only if it becomes necessary to do so.
You are reminded of the need for good English and clear presentation in your answers.

At the end of the examination, fasten all your work securely together.
The number of marks is given in brackets [ ] at the end of each question or part question.

For Examiner's Use	
1	
2	
Total	

This document consists of **9** printed pages and **3** blank pages.

© UCLES 2011

BLANK PAGE

© UCLES 2011

You may not need to use all of the materials provided.

For Examiner's Use

1 In this experiment, you will investigate how the equilibrium position of a pivoted wooden strip changes when a horizontal force is applied.

(a) Thread the string over the pulley and suspend the mass hanger from the end loop of the string, as shown in Fig. 1.1.

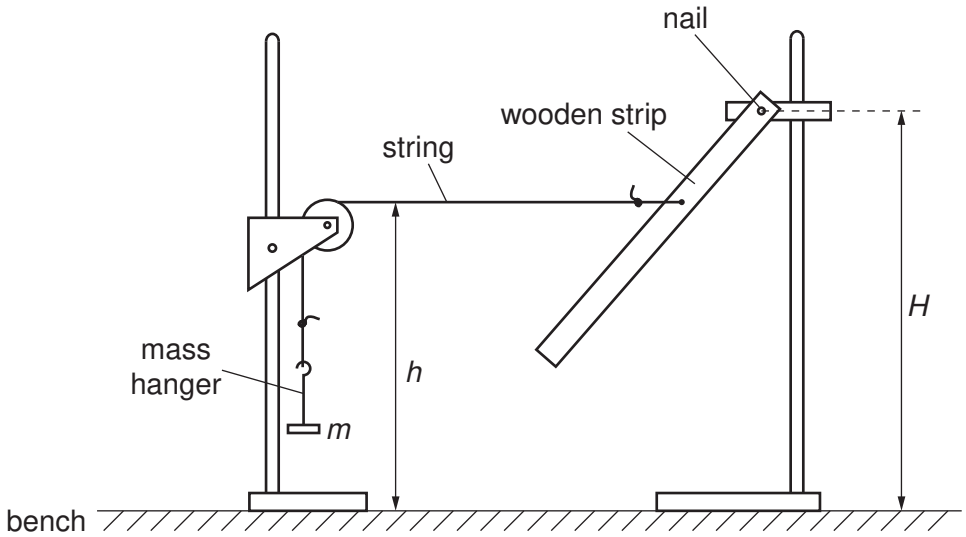

Fig. 1.1

(b) Measure and record the height H of the nail above the bench.

H = ... cm [1]

(c) Record the mass m that is suspended from the string.

m = ...

(d) **(i)** Adjust the height of the pulley until the string is parallel to the bench. Measure and record the height h of the string above the bench.

h = ... cm [1]

(ii) Calculate the value of $(H-h)$.

$(H-h)$ = ... cm

(e) By adding masses to the hanger, change the total suspended mass m. Repeat **(c)** and **(d)** until you have six sets of values for m and h.

In your table of results include columns for the values of m^2 and $\frac{1}{(H-h)^2}$.

For Examiner's Use

[10]

(f) **(i)** Plot a graph of $\frac{1}{(H-h)^2}$ on the y-axis against m^2 on the x-axis. [3]

(ii) Draw the straight line of best fit. [1]

(iii) Determine the gradient and y-intercept of this line.

gradient = ...

y-intercept = ...

[2]

© UCLES 2011

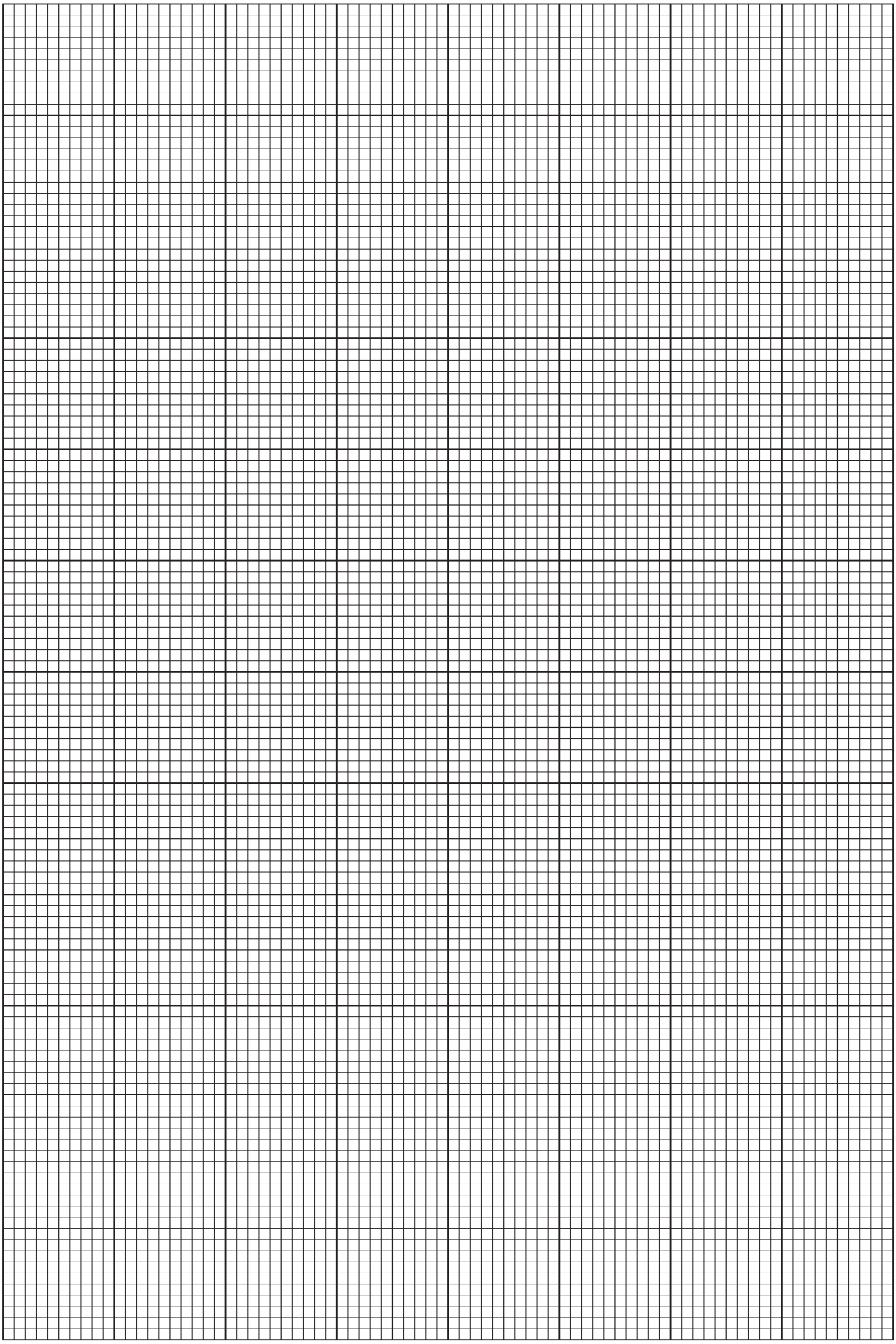

For Examiner's Use

(g) It is suggested that the quantities h, H and m are related by the equation

$$\frac{1}{(H-h)^2} = abm^2 + b$$

where a and b are constants.

Using your answers from **(f)(iii)**, determine the values of a and b.
Give appropriate units.

For Examiner's Use

a = ...

b = ...

[2]

BLANK PAGE

Please turn over for Question 2.

You may not need to use all of the materials provided.

For Examiner's Use

2 In this experiment you will investigate the deflection of a metre rule when two loads are placed on it.

(a) (i) Position a metre rule on the two supports as shown in Fig. 2.1, with the supports 15.0 cm from each end of the rule.

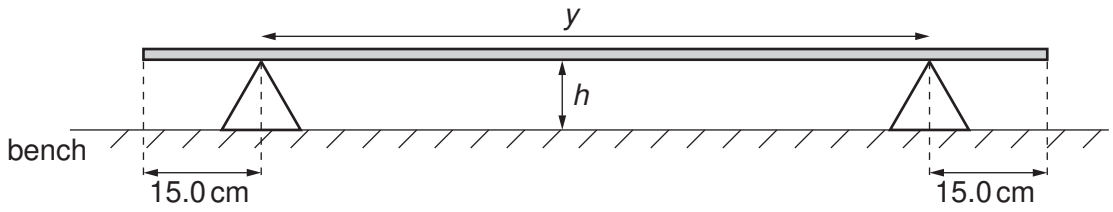

Fig. 2.1

(ii) Determine the distance *y* between the two supports.

y = ...[1]

(iii) Measure the height *h* of the bottom edge of the mid-point of the rule above the bench.

h = ...[1]

(b) (i) Position the two 500 g masses on top of the rule, with a mass 5.0 cm from each end of the rule, as shown in Fig. 2.2.

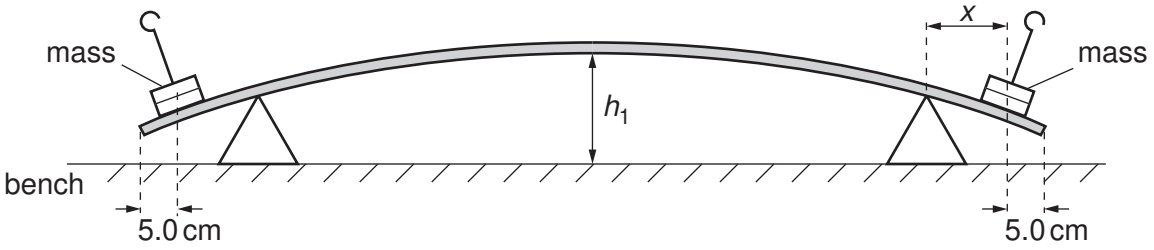

Fig. 2.2

(ii) Determine the distance *x* of a mass from its nearest support.

x = ...[1]

(iii) Measure the height h_1 of the bottom edge of the mid-point of the rule above the bench.

h_1 = ...[1]

© UCLES 2011

For Examiner's Use

(c) (i) Calculate the deflection d of the mid-point of the rule, where $d = h_1 - h$.

d = ...[1]

(ii) Estimate the percentage uncertainty in your value of d.

percentage uncertainty = ...[1]

(d) (i) Remove the two 500 g masses and reposition the two supports 25.0 cm from each end of the rule.

(ii) Repeat **(a)(ii)** and **(a)(iii)**.

y = ...

h = ...

(e) (i) Position the two 500 g masses on top of the rule, with a mass 15.0 cm from each end of the rule.

(ii) Repeat **(b)(ii)**, **(b)(iii)** and **(c)(i)**.

x = ...

h_1 = ...

d = ...
[4]

Question 2 continues on the next page.

(f) **(i)** It is suggested that the quantities d and y are related by the equation

$$d = ky^2$$

where k is a constant.

Using your data, calculate two values of k.

For Examiner's Use

first value of k = ...

second value of k = ...

[1]

(ii) Explain whether your results support the suggested relationship.

.....

.....

.....

.....[1]

(g) (i) Describe four sources of uncertainty or limitations of the procedure for this experiment.

For Examiner's Use

1. .....

.....

2. .....

.....

3. .....

.....

4. .....

[4]

(ii) Describe four improvements that could be made to this experiment. You may suggest the use of other apparatus or different procedures.

1. .....

.....

2. .....

.....

3. .....

.....

4. .....

.....

[4]

© UCLES 2011

BLANK PAGE

Permission to reproduce items where third-party owned material protected by copyright is included has been sought and cleared where possible. Every reasonable effort has been made by the publisher (UCLES) to trace copyright holders, but if any items requiring clearance have unwittingly been included, the publisher will be pleased to make amends at the earliest possible opportunity.

University of Cambridge International Examinations is part of the Cambridge Assessment Group. Cambridge Assessment is the brand name of University of Cambridge Local Examinations Syndicate (UCLES), which is itself a department of the University of Cambridge.

© UCLES 2011